863S4

PNEUMATIC STAPLER
ENGRAPADORA NEUMÁTICA
AGRAFEUSE PNEUMATIQUE

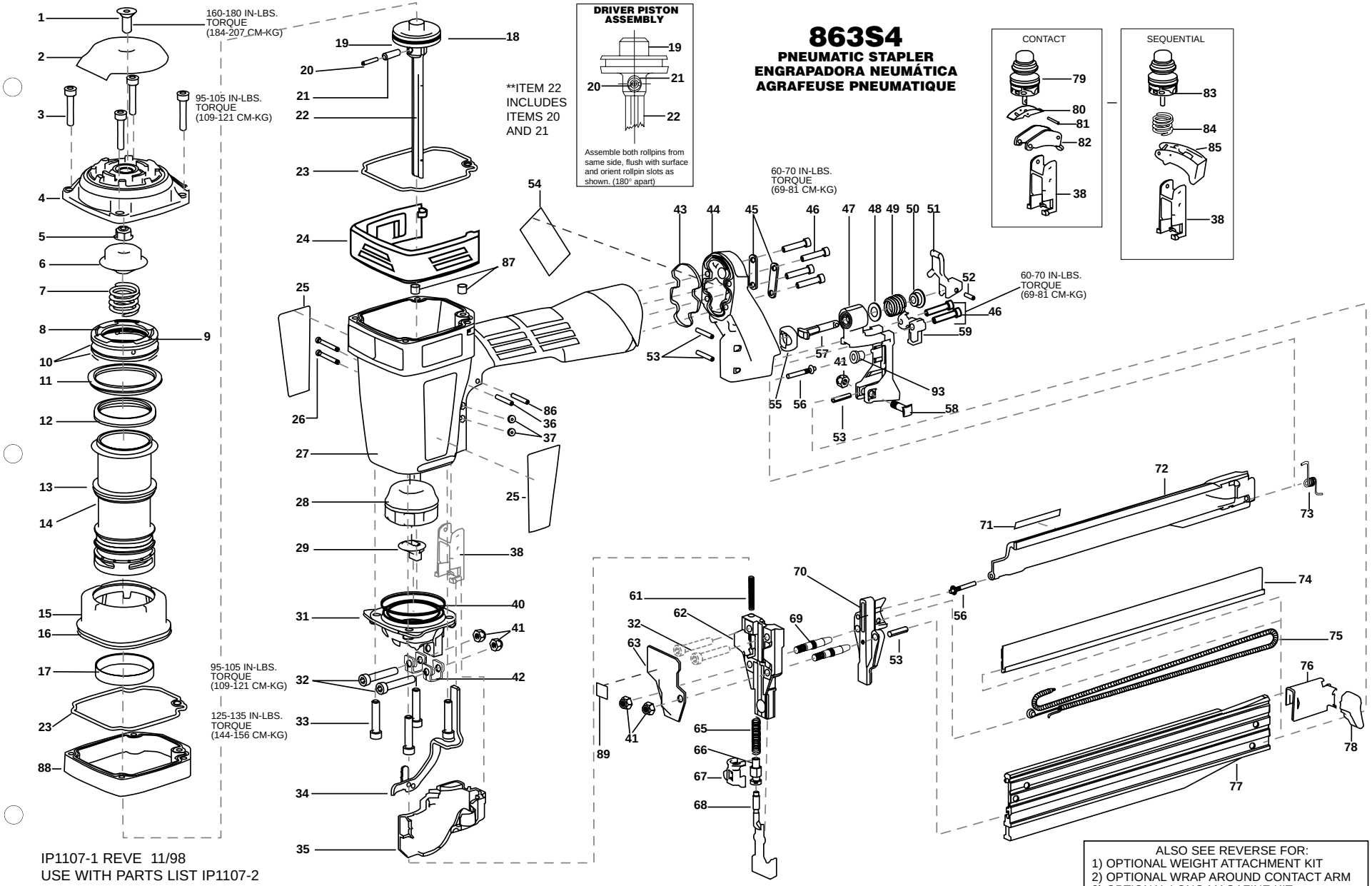

IP1107-1 REVE 11/98
USE WITH PARTS LIST IP1107-2

ALSO SEE REVERSE FOR:
1) OPTIONAL WEIGHT ATTACHMENT KIT
2) OPTIONAL WRAP AROUND CONTACT ARM
3) OPTIONAL LONG MAGAZINE KIT

TO SAVE FOR FUTURE REFERENCE:
To file this illustration in a ring binder, cut on the above line and punch holes where indicated on the other end of this sheet.