T50S2
PNEUMATIC STAPLER

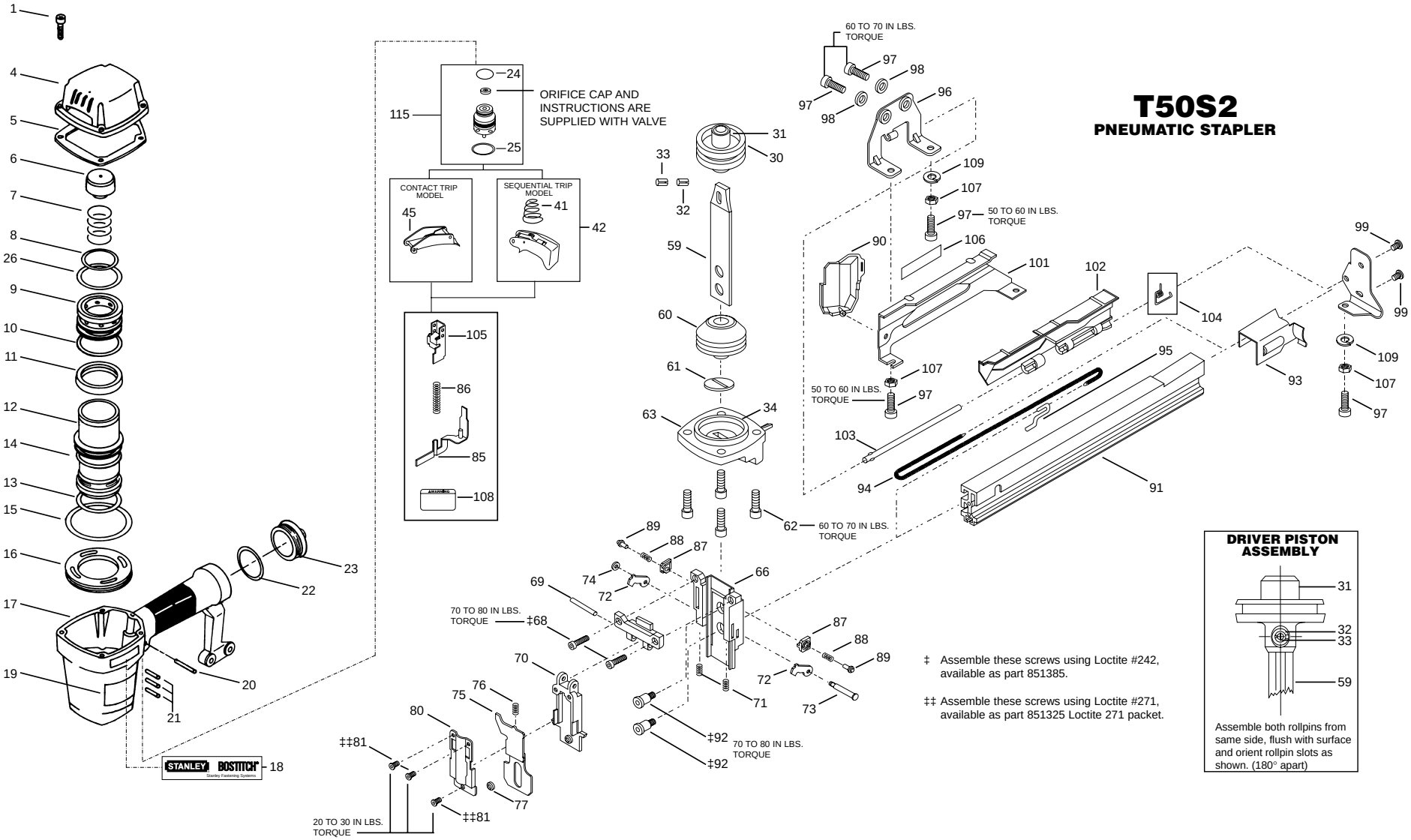

‡ Assemble these screws using Loctite #242, available as part 851385.

‡‡ Assemble these screws using Loctite #271, available as part 851325 Loctite 271 packet.

DRIVER PISTON ASSEMBLY

Assemble both rollpins from same side, flush with surface and orient rollpin slots as shown. (180° apart)