T40S2

PNEUMATIC STAPLER
AGRAFEUSE PNEUMATIQUE
ENGRAPADORA NEUMÀTICA

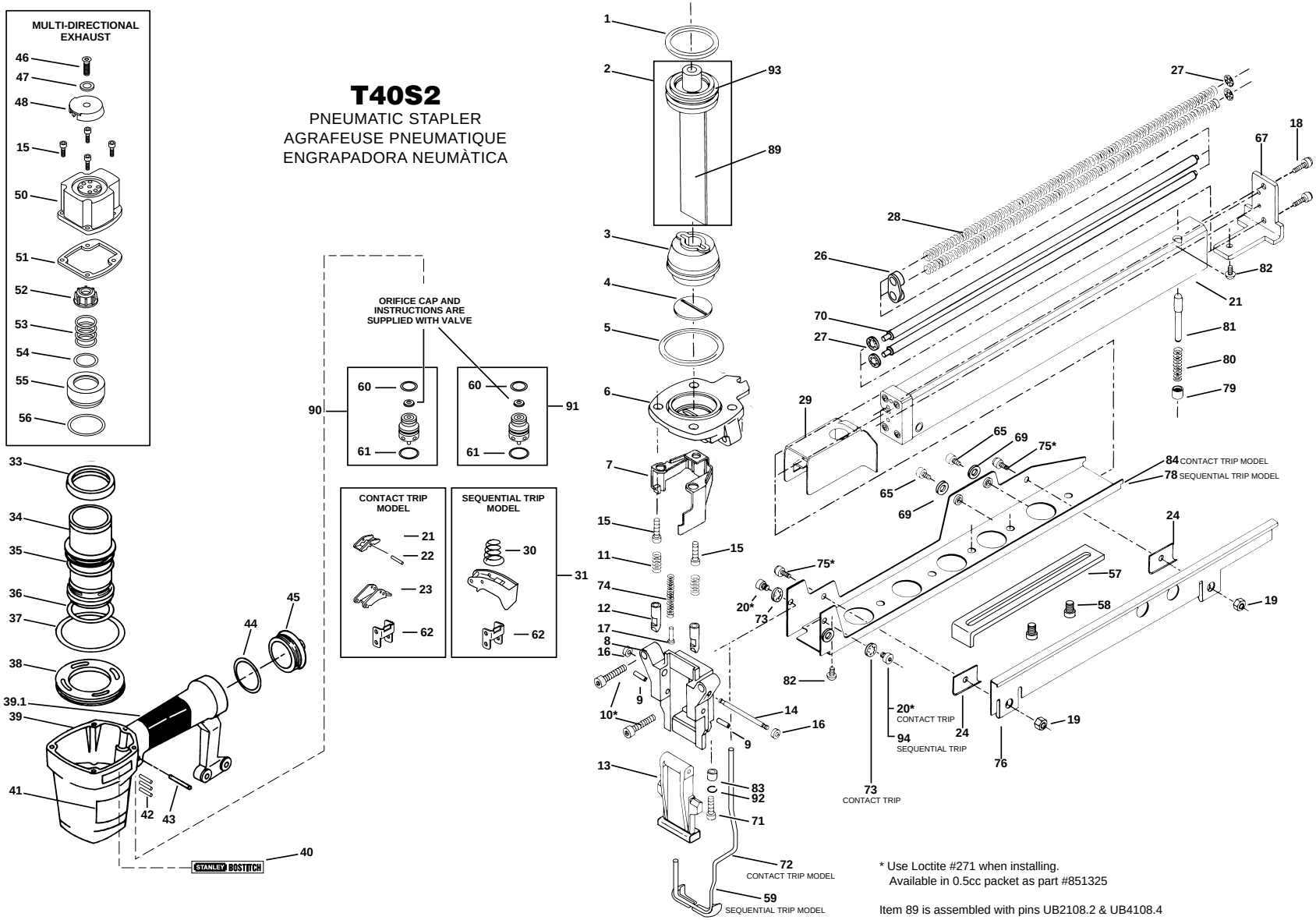

* Use Loctite #271 when installing.
Available in 0.5cc packet as part #851325

Item 89 is assembled with pins UB2108.2 & UB4108.4

IP1050-1REVC
USE WITH PARTS LIST IP1050-2 AND 103698 OPERATION & MAINT. MANUAL